PohlCon

PARTNER
FROM START
TO FUTURE.

Wide-span cable ladder WL 200

Assembly instructions

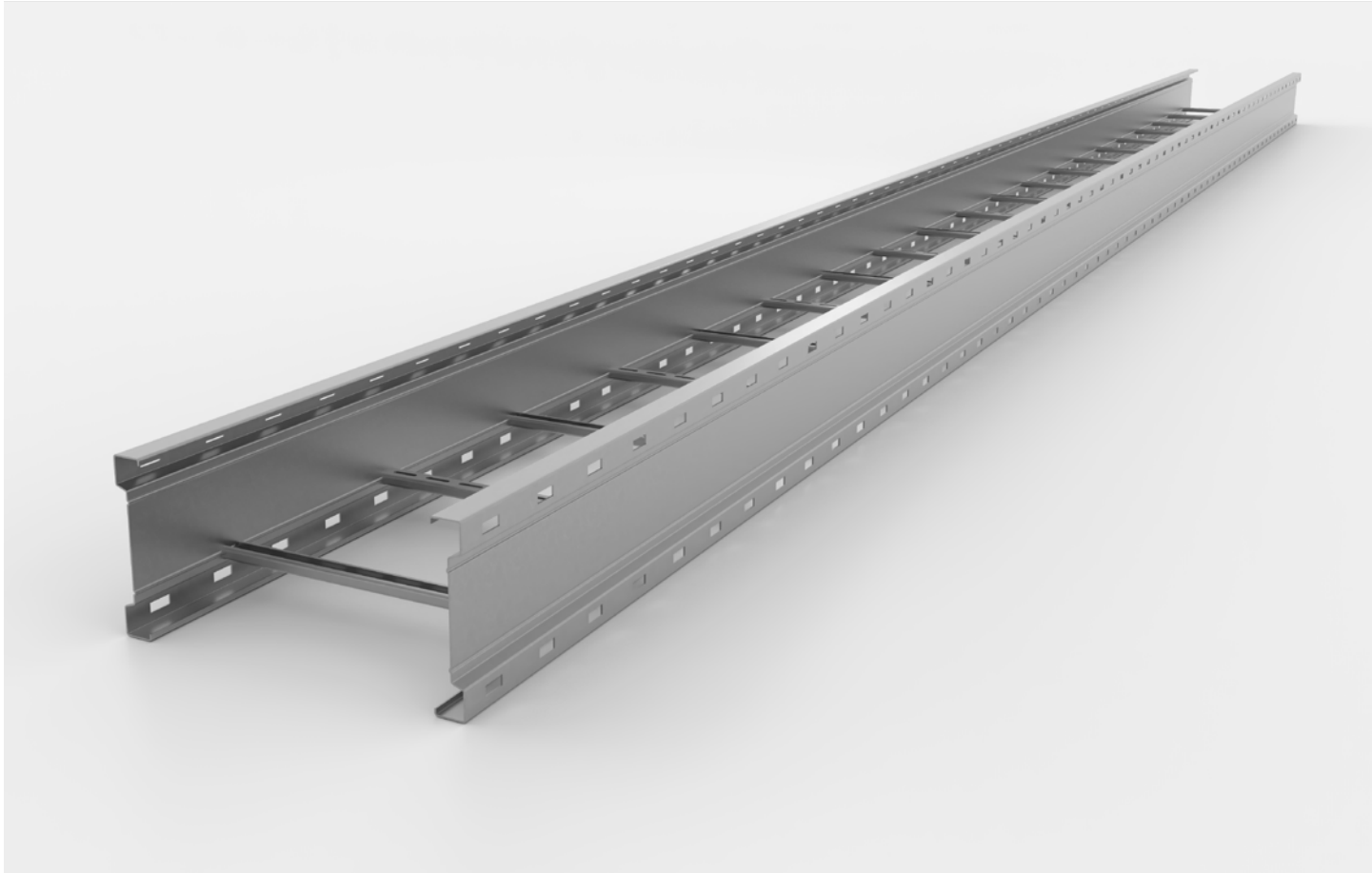

Table of Contents

Introduction

General Information 3

Safety Instructions 4

Assembly steps

Fastening of elements 4

Connector installation 5

Horizontal change of direction 6

Vertical change of direction 8

Accessory installation 9

Cover installation 10

Index 11

General Information

The wide-span cable ladder WL 200 allows support spans of up to twelve metres thanks to its high transverse rigidity. Sufficient air circulation is maintained around the welded rungs, even when power cables are installed, preventing heat build-up. Supporting structures must be designed by a qualified engineer

The following general instructions must be observed before starting installation:

1. The permissible tightening torques for all bolted connections must be observed (see table "Recommended tightening torques").
2. Fittings and changes in direction must be supported separately.
3. For all fittings, changes in direction and open ends, a maximum distance of 500 mm from the fitting end or support must be maintained (see Fig. 1).
4. Cutting and separating operations must be carried out with the utmost care and in compliance with occupational health and safety requirements (see Fig. 2).
5. After deburring, all cut and separated edges must be galvanised on site. For repairing cut edges and damaged areas on plain or pre-galvanised material (finish S), use cold zinc paint KZF or cold zinc spray KZS. For batch hot-dip galvanised material (finish F), only cold zinc paint KZF may be used.
6. Connection points must be adequately bolted. Each side of a wide-span cable ladder WL 200 must be secured with four bolted connections using flange nuts, self-locking nuts and washers.
7. In applications with large temperature fluctuations, one fixed bearing and one sliding bearing must be provided at each joint connection (see Fig. 3).
8. Locking devices must be used where vibration is present.
9. Threaded ends must be avoided within the cable routing area (see Fig. 3). Risk of cable damage.

Recommended tightening torques

Nominal thread diameter	Property class for bolts/screws GV/F (DIN EN ISO 898-1)	Tightening torque [Nm] acc. to VDI 2230 Coefficient of friction μ = 0.12	Property class for bolts/screws E/E4 (DIN EN ISO 3506-1)	Tightening torque [Nm] acc. to VDI 2230 Coefficient of friction μ = 0.20
M6	4.6	**3.7**	50	**4.6**
M8	4.6	**9.1**	50	**11.2**
M10	4.6	**18.3**	50	**22.2**
M12	4.6	**31.0**	50	**38.0**
M6	8.8	**10.1**	70	**10.0**
M8	8.8	**24.6**	70	**24.1**
M10	8.8	**48.0**	70	**47.7**
M12	8.8	**84.0**	70	**82.0**

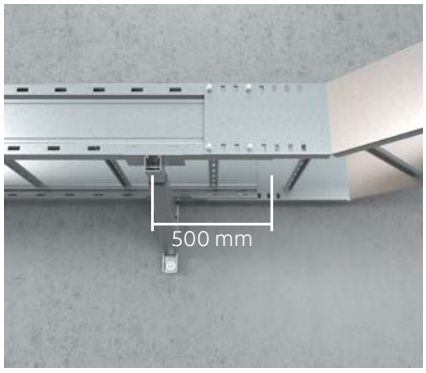

Fig. 1: Support spacing
Maximum distance to open ends, fitting ends or changes in direction: 500 mm.

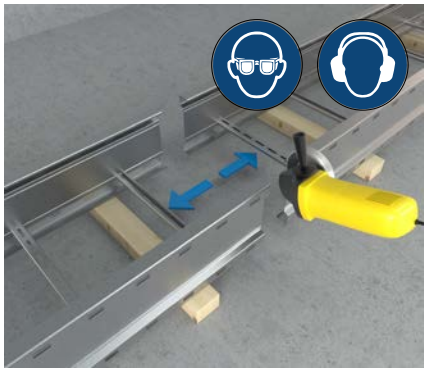

Fig. 2: Cutting and separation work
Carry out cutting and separation work in accordance with occupational safety regulations.

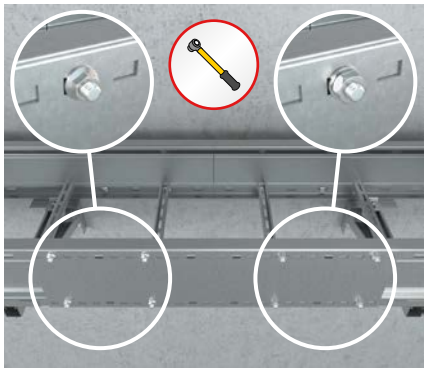

Fig. 3: Bolted connections
Left: fixed bearing (flange nut).
Right: sliding bearing (loose washer).
Maintain a clearance of 4 mm. Bolt heads must face inwards.

Safety Instructions



Wear safety glasses.



Wear hearing protection.



Observe the tightening torques specified for fastening elements.

Fastening of Elements

Fastening of brackets, fittings and accessories

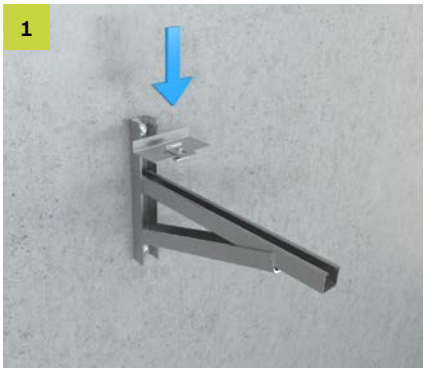

Wide-span cable tray rail support WLHS
Fasten or clamp the rear wide-span cable tray rail support WLHS to the support structure using an appropriate fastening set.
For brackets: WLHS-K
For profile rails: WLHS-A
For beams: WLHS-T (alternatively WLHS and WLKLT)

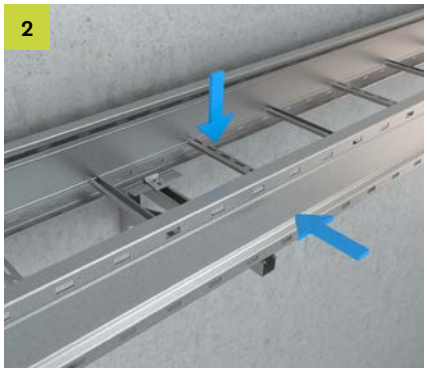

Place the wide-span cable ladder onto the support and push it against the bolted WLHS.

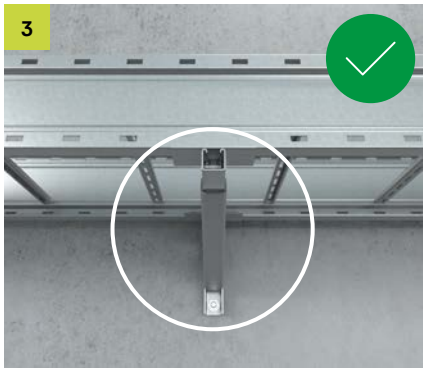

Ensure that the supporting structure is correctly positioned between the rungs of the wide-span cable ladder.

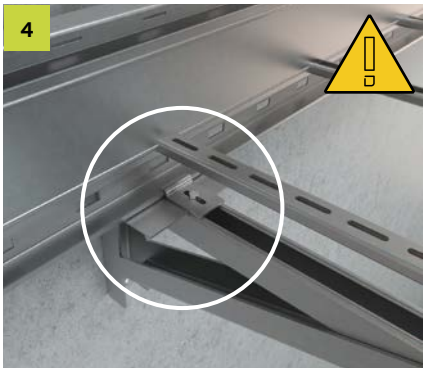

The WLHS must be fastened to the supporting structure even if a rung is positioned directly above it.

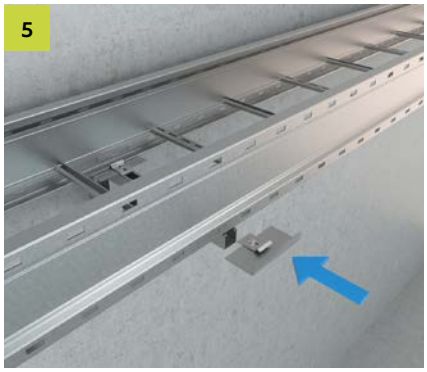

Slide the front WLHS onto the supporting structure and fasten it together with the wide-span cable ladder and the supporting structure.

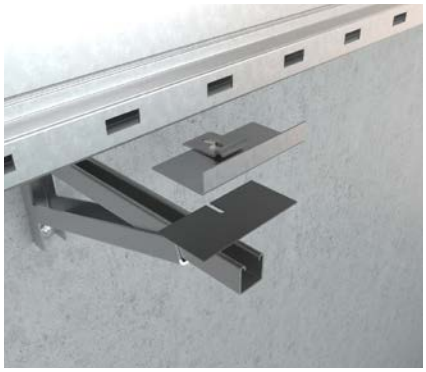

Insulation strip WLHS-IS
The WLHS-IS insulation strip prevents contact corrosion between the WLHS rail support and the supporting structure and protects the surfaces.

Only one WLHS may be fastened to each side rail on a steel beam. The fastenings must be positioned offset and opposite one another.

WLHS is essential for achieving the maximum load capacities.

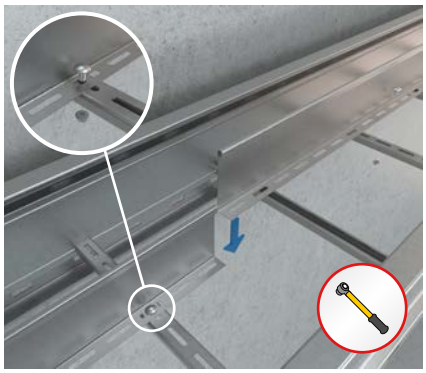

Accessories on rungs
Accessories are generally fastened to the rung using the clamp fastening set KLR.



Fittings and accessories on side rails
Fittings are generally fastened to each side rail using four clamp fastening sets KLS 10×20. Accessories are fastened in accordance with the instructions supplied with the product.

Connector installation

1

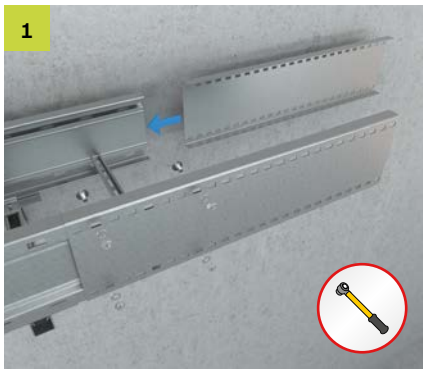

Wide-span cable tray connector WLV 200
Slide the WLV 200 onto the outside of the side rail of the wide-span cable ladder and fasten it to each side rail using four clamp fastening sets KLS 10×20.

2

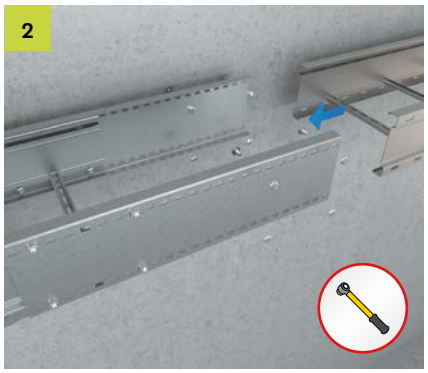

Insert the connecting ladder section and fasten it to the WLV 200 using self-locking hexagon nuts SEMSS 10 or self-locking hexagon nuts SEMB 10.
Permissible tightening torque: 3 Nm.

Horizontal change of direction

With standard fittings

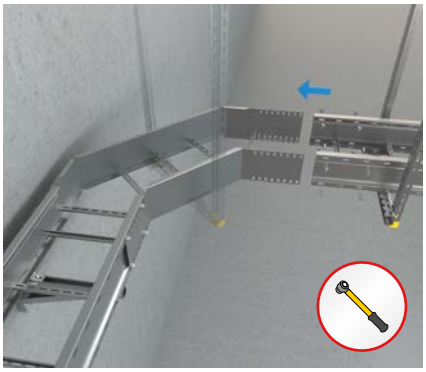

Wide-span cable ladder bend WLB 200
Insert the WLB 200 into the wide-span cable ladder and fasten it to each side rail using four bolted connections.
Slide on the connecting ladder section and fasten it to each side rail using four bolted connections.

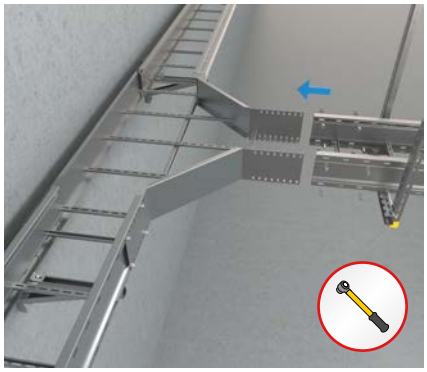

Wide-span cable ladder branch WLA 200
Insert the WLA 200 into the wide-span cable ladder and fasten it to each side rail using four bolted connections.
Slide on the connecting ladder sections and fasten them to each side rail using four bolted connections.

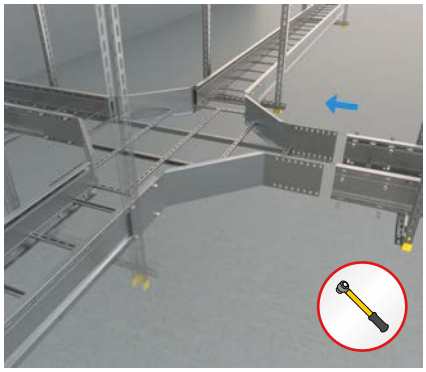

Wide-span cable ladder crossing WLK 200
Insert the WLK 200 into the wide-span cable ladder and fasten it to each side rail using four bolted connections.
Slide on the connecting ladder sections and fasten them to each side rail using four bolted connections.

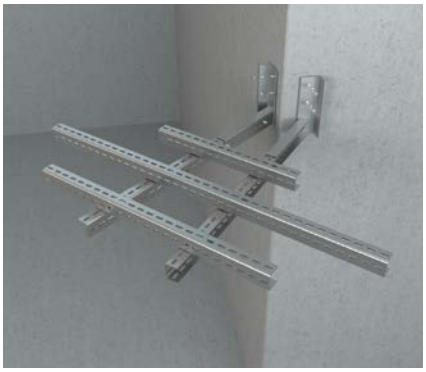

Corner support EBW
Installation on the column or wall corner is carried out using four anchors, e.g. expansion anchor SD 12/10.

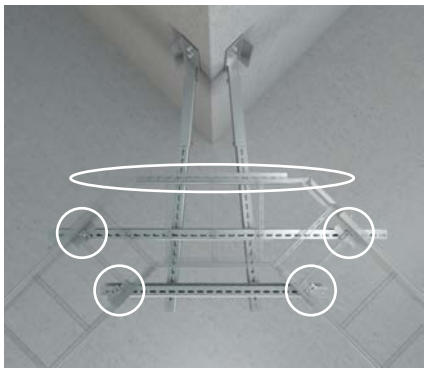

Position the KHU profiles so that fittings are supported at the connection points and at the outer rail.

Without standard fittings

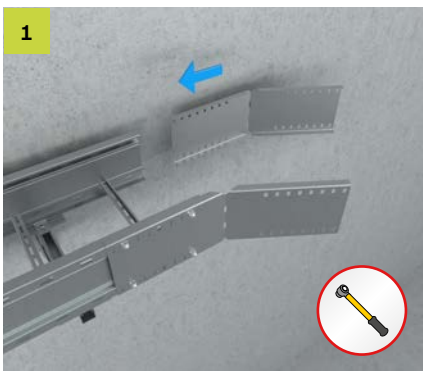

Wide-span cable tray connector, horizontal, less than 30° WLVH 200
Bend both WLVH 200 connectors to the required angle and insert them into the side rails. Fasten each side rail using four bolted connections.

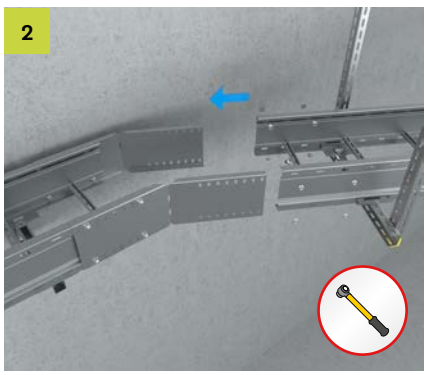

Slide the connecting ladder sections into the WLVH 200 connectors and fasten them to each side rail using four bolted connections.



Wide-span cable tray connector, horizontal, greater than 30° WLVH 200
Cut the wide-span cable ladder to a mitre angle as required. If necessary, remove the rung completely.

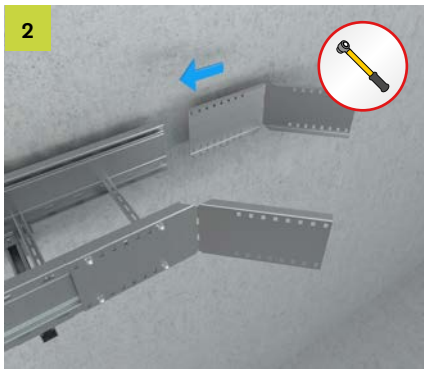

Bend both WLVH 200 connectors to the required angle and insert them into the side rails.
Fasten each side rail using four bolted connections.

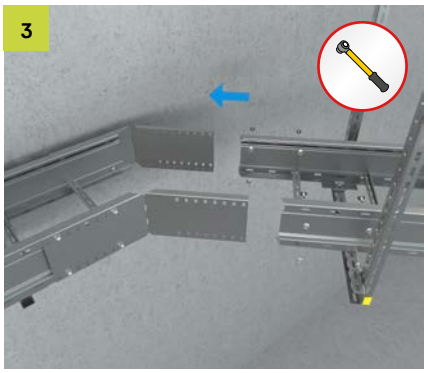

Slide the connecting ladder sections into the WLVH 200 connectors and fasten them to each side rail using four bolted connections.

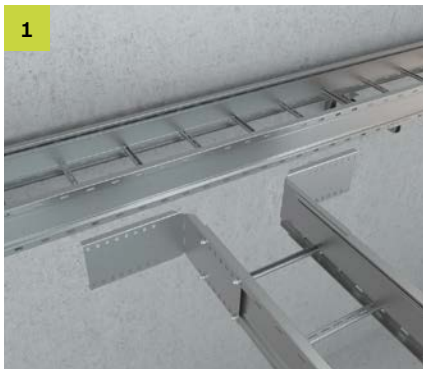

Wide-span cable tray connector, horizontal, branch WLVH 200
Bend both WLVH 200 connectors to an angle of 90°. Then insert them into the side rails of the branching wide-span cable ladders and fasten them to each side rail using four bolted connections.



Insert the WLVH 200 connectors into the side rails of the continuous wide-span cable ladder and fasten them to each side rail using four bolted connections.

Vertical change of direction

Without standard fittings

1

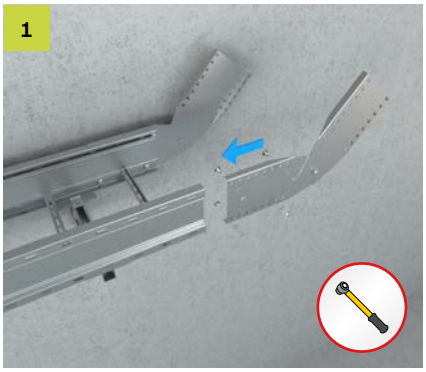

Wide-span cable tray connector, vertical WLVV 200
Adjust both WLVV 200 connectors to the required angle and fasten them together. Then insert them into the side rails of the wide-span cable ladder and fasten them to each side rail using four bolted connections.

2

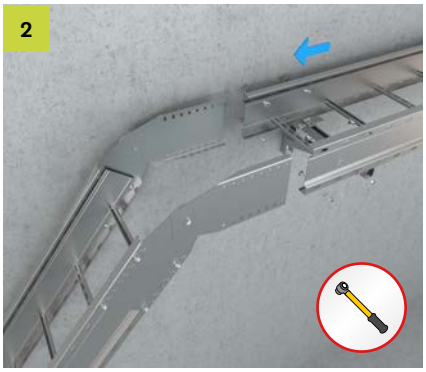

Slide the connecting ladder sections into the WLVV 200 connectors and fasten them to each side rail using four bolted connections.

Accessory installation



Wide-span cable ladder drop-out plate WLKAB
Place the WLKAB on the desired rung and fasten it to the rung using channel nuts AM 16.

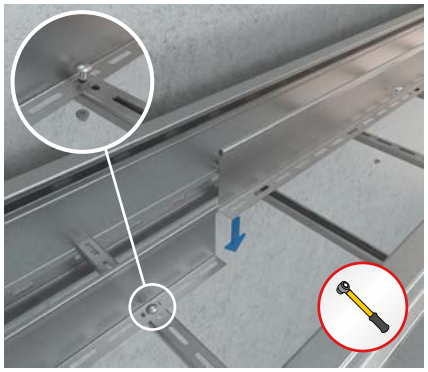

Wide-span cable tray divider WTR 200
Fasten the WTR 200 to the rungs at three points using clamp fastening sets KLR (in the centre of the divider and as close as possible to both ends of the divider).

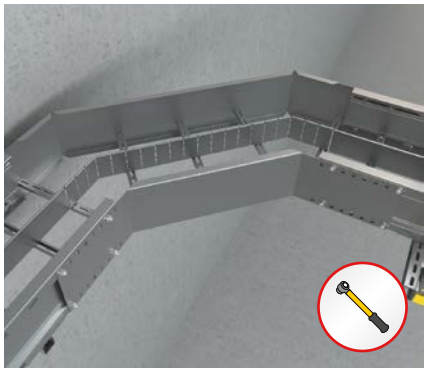

Wide-span cable tray divider, flexible WTRV 200
Fasten the WTRV 200 to the rungs at three points using clamp fastening sets KLR (in the centre of the divider and as close as possible to both ends of the divider).



Cable clamp for fastening to C profile rails H
Slide the clamp over the cable.
Hook the tee-head bolt into every second rung. Optionally position the counter trough GW and tighten the bolted connection.



Cable clamp for fastening to round and flat profiles RU
Slide the clamp over the cable.
Slide the clamp head over the rung.
Optionally position the counter trough GW and tighten the bolted connection.



Mounting plate MP-W
Fasten the MP-W for electrical components to the side rail of the wide-span cable ladder using two bolted connections.



Edge protection strip KSB
Cut the KSB to the required length and slide it onto exposed edges (e.g. side rails, covers, dividers, etc.) to protect cables from damage.

Cover installation



Wide-span cover WLD with storm protection bracket WLD-SW
Secure the WLD on both sides using WLD-SW at three positions (in the centre of the cover and 100 mm from each end of the cover; 6 pcs./3 m).
In areas exposed to wind, the number of WLD-SW must be increased (minimum 10 pcs./3 m).

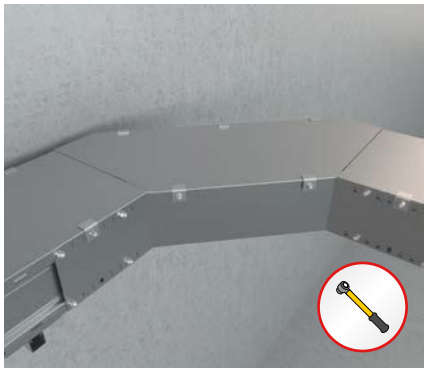

Wide-span fitting covers (WLAD, WLBD, WLKD) with storm protection bracket WLD-SW
Mark the required positions for the WLD-SW on the fitting cover according to the number required and drill through-holes (Ø11 mm) in the side rail.
Then fasten the WLD-SW brackets.

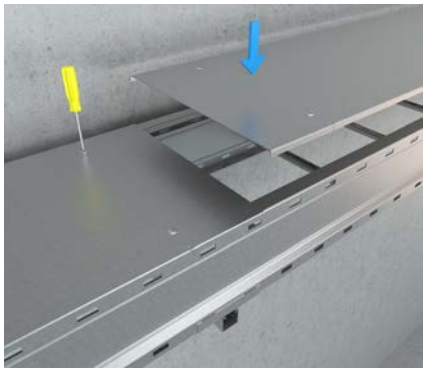

Wide-span cover with turning bolts WLDR
The WLDR is installed in the same way as the wide-span cover WLD.
Tighten the turning bolts using a screwdriver until the slot in the bolt head is aligned longitudinally with the wide-span cable ladder.

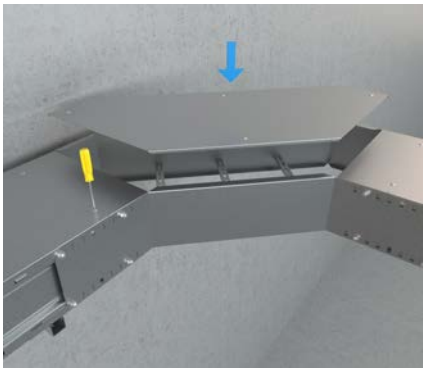

Wide-span fitting covers with turning bolts (WLADR, WLBDR, WLKDR)
The fitting covers with turning bolts WLADR, WLBDR and WLKDR are installed in the same way as the wide-span cover with turning bolts WLDR.

	WLD-SW
WLAD 20 / 30 / 40	7x
WLAD 50 / 60	8x
WLBD 20 / 30 / 40	5x
WLBD 50 / 60	6x
WLKD 20 / 30 / 40 / 50 / 60	8x

Number of storm protection brackets WLD-SW to be installed
The distance between two storm protection brackets WLD-SW must not exceed 400 mm.

Index

Wide-span Cable Trays
WL 200 ..... Wide-span cable ladder, height = 200 mm

Fittings
WLA 200 ..... Wide-span cable ladder branch, height = 200 mm
WLB 200 ..... Wide-span cable ladder bend, height = 200 mm
WLK 200 ..... Wide-span cable ladder crossing, height = 200 mm

Rail Supports and Fastenings
EBW ..... Corner support
WLHS ..... Wide-span cable tray rail support
WLHS-A ..... Wide-span cable tray clamp fastening for profile rails
WLHS-IS ..... Insulation strip
WLHS-K ..... Wide-span cable tray clamp fastening for brackets
WLHS-T ..... Wide-span cable tray clamp fastening for beams
WLKLT ..... Wide-span cable tray clamp

Fastening Accessories
AM 16 ..... Channel nut
KLR ..... Clamp fastening set (2x SEMS 6 + 2x FRSV 6x12)
KLS 10x20 ..... Clamp fastening set (1x SEM 10 + 1x FRSV 10x20 + 1x US 10x21)
SD 12/10 ..... Expansion anchor
SEMB 10 ..... Hexagon nut, self-locking, DIN 934
SEMSS 10 ..... Hexagon nut, self-locking, DIN 985
WLV 200 ..... Wide-span cable tray connector, height = 200 mm
WLVH 200 ..... Wide-span cable tray connector, horizontal, height = 200 mm
WLVV 200 ..... Wide-span cable tray connector, vertical, height = 200 mm

Profile Rails
KHU ..... Bracket support

Cable Clamps
GW ..... Counter trough
H ..... Cable clamp for fastening to C profile rails
RU ..... Cable clamp for fastening to round and flat profiles

Covers
WLAD ..... Wide-span tee cover
WLADR ..... Wide-span tee cover with turning bolts
WLBD ..... Wide-span bend cover
WLBDR ..... Wide-span bend cover with turning bolts
WLD ..... Wide-span cover
WLDR ..... Wide-span cover with turning bolts
WLD-SW ..... Storm protection bracket
WLKD ..... Wide-span crossing cover
WLKDR ..... Wide-span crossing cover with turning bolts

Accessories
KSB ..... Edge protection strip
KZF ..... Cold zinc paint
KZS ..... Cold zinc spray
MP-W ..... Mounting plate
WLKAB ..... Wide-span cable ladder drop-out plate
WTR 200 ..... Wide-span cable tray divider, height = 200 mm
WTRV 200 ..... Wide-span cable tray divider, flexible, height = 200 mm

Fittings, covers, accessories and fastening accessories are not supplied with the wide-span cable ladders and must be ordered separately.

All rights reserved. This document may not be reprinted or electronically reproduced without our prior written permission. The contents are subject to change without notice. Errors and omissions excepted. The publisher accepts no liability whatsoever on any legal grounds. This document supersedes all previous documentation.

© PohlCon | PC-LIT-MA-WL200-EN | 11-2026 | 2. v. | 11-2026

PohlCon GmbH
Nobelstr. 51
12057 Berlin
Germany

T +49 30 68283-04

www.pohlcon.com