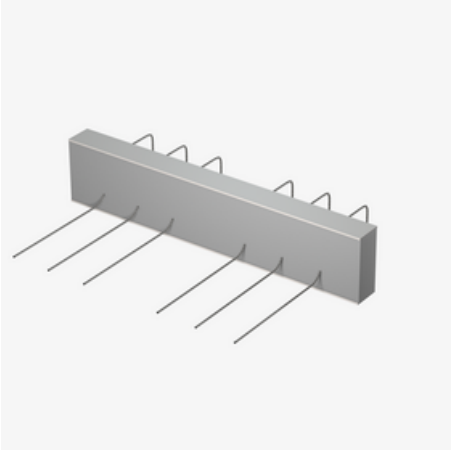

IPZQ

Thermally insulated slab connection for tension-free transmission of shear forces without a pressure component

IPZQ is a thermally insulated slab connection with an 80 mm insulating body for transmitting shear forces in supported reinforced concrete components. The stainless steel rebar is resistant to corrosion. For the purpose of tension-free support, this item does not have a pressure component. It complies with fire protection requirements: IPZQ is available for fire protection structures up to REI 120. Please specify the load-bearing capacity, element height and fire protection version when ordering.

Type testing ISOPRO® 120 thermal insulation element

Test report no. 4117-5076 confirms the suitability of ISOPRO® thermal insulation elements in accordance with the applicable building regulations.

ETA European Technical Assessment: ETA-17/0466

abG General Building Approval: Z-15.7-354 (combined with ETA-17/0466)

TYP Type approval: 4117-5076

Article	Q-bar on ceiling side	G
211900015020 IPZQ10	Curved	1.300 kg
211900015022 IPZQ20	Curved	1.500 kg
211900015024 IPZQ30	Curved	1.700 kg
211900015026 IPZQ40	Curved	2.000 kg
211900015028 IPZQ50	Curved	2.400 kg
211900015030 IPZQ70	Straight	3.100 kg
211900015032 IPZQ80	Straight	3.500 kg
211900015034 IPZQ85	Straight	4.500 kg
211900015036 IPZQ90	Straight	5.300 kg

PohlCon

PohlCon GmbH
Nobelstraße 51 | 12057 Berlin
Phone: +49 30 68283-04 | Fax: +49 30 68283-383 | contact@pohlcon.com

Issue date: 26.11.2026. Errors and technical changes reserved

Article	Q-bar on ceiling side	G
211900015038 IPZQ100	Straight	7.200 kg
211900015040 IPZQ110	Straight	8.500 kg
211900015042 IPZQ120	Straight	9.800 kg

G: Weight per storage unit

PohlCon GmbH
Nobelstraße 51 | 12057 Berlin
Phone: +49 30 68283-04 | Fax: +49 30 68283-383 | contact@pohlcon.com

Issue date: 26.11.2026. Errors and technical changes reserved