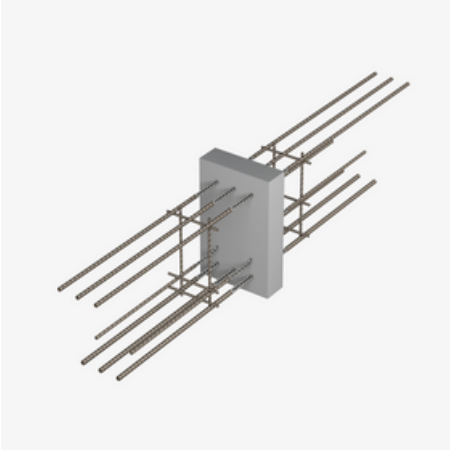

IPTS

Thermally insulated connection for cantilevered reinforced concrete beams

IPTS is a thermally insulated connection with an 80 mm insulating body for connecting cantilevered reinforced concrete beams with ceiling slabs. It is suitable for transmitting negative moments and positive shear forces. The stainless steel rebar is resistant to corrosion. It complies with fire protection requirements: IPTS is available for fire protection structures up to REI 120. Please specify the load-bearing capacity, element dimensions and fire protection version when ordering.

Article	G
211500018978 IPTS1	7.130 kg
211500018979 IPTS2	11.220 kg
211500018980 IPTS3	16.210 kg
211500018981 IPTS4	22.640 kg

G: Weight per storage unit

PohlCon

PohlCon GmbH
Nobelstraße 51 | 12057 Berlin
Phone: +49 30 68283-04 | Fax: +49 30 68283-383 | contact@pohlcon.com

Issue date: 26.11.2026. Errors and technical changes reserved