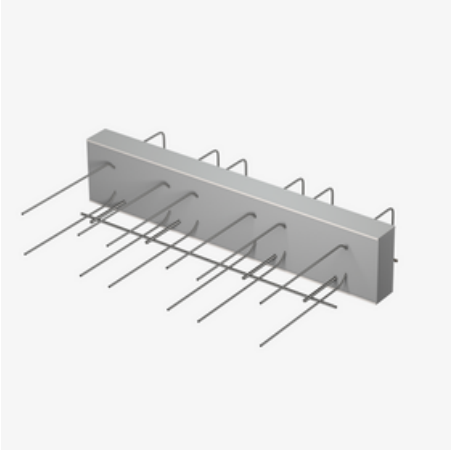

IPTQQ

Thermally insulated slab connection for transmitting positive and negative shear forces with uplifting loads

IPTQQ is a thermally insulated slab connection with an 80 mm insulating body for transmitting positive and negative shear forces in supported reinforced concrete components with uplifting loads. The stainless steel rebar is resistant to corrosion. The pressure plane consists of steel compression rods. It complies with fire protection requirements: IPTQQ is available for fire protection structures up to REI 120. Please specify the load-bearing capacity, element height and fire protection version when ordering.

ETA European Technical Assessment: ETA-17/0466

abG General Building Approval: Z-15.7-354 (combined with ETA-17/0466)

Article	Q-bar on ceiling side	G
212100019002 IPTQQ10	Curved	4.170 kg
212100019003 IPTQQ30	Curved	4.950 kg
212100019004 IPTQQ40	Curved	5.840 kg
212100019005 IPTQQ50	Curved	7.010 kg
212100019006 IPTQQ70	Straight	8.870 kg
212100019007 IPTQQ90	Straight	14.820 kg
212100019008 IPTQQ110	Straight	23.760 kg

G: Weight per storage unit

PohlCon

PohlCon GmbH
Nobelstraße 51 | 12057 Berlin
Phone: +49 30 68283-04 | Fax: +49 30 68283-383 | contact@pohlcon.com

Issue date: 26.11.2026. Errors and technical changes reserved