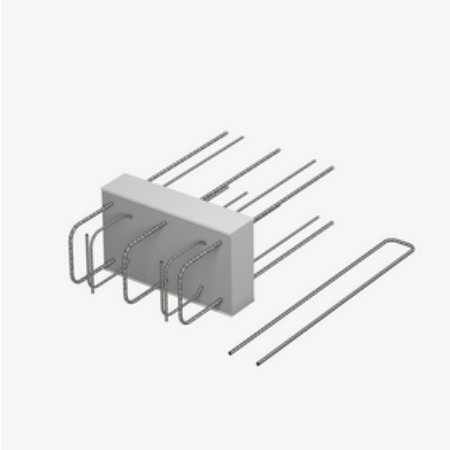

IPTF

Thermally insulated connection for front parapets

IPTF is a thermally insulated connection with an 80 mm insulating body for connecting front parapets with ceiling slabs. It is suitable for transmitting positive and negative shear forces, positive and negative moments and horizontal forces. These elements are used at specific points depending on the relevant structural requirements. The stainless steel rebar is resistant to corrosion. It complies with fire protection requirements: IPTF is available for fire protection structures up to REI 120. Please specify the element height and fire protection version when ordering.

Article	G
211300018977 IPTF	2.360 kg

G: Weight per storage unit

PohlCon GmbH
Nobelstraße 51 | 12057 Berlin
Phone: +49 30 68283-04 | Fax: +49 30 68283-383 | contact@pohlcon.com

Issue date: 26.11.2026. Errors and technical changes reserved