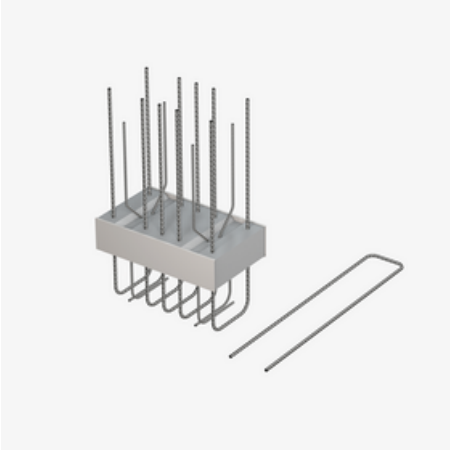

# IPTA

## Thermally insulated connection for attached parapets and balustrades

IPTA is a thermally insulated connection with an 80 mm insulating body for connecting attached parapets and balustrades with to ceiling slabs. It is suitable for transmitting normal forces, positive and negative moments and horizontal forces. These elements are used at specific points depending on the relevant structural requirements. The stainless steel rebar is resistant to corrosion. It complies with fire protection requirements: IPTA is available for fire protection structures up to REI 120. Please specify the load-bearing capacity, parapet width and fire protection version when ordering.

| Article | G |
|---|---|
| 211200020248<br>IPTA 1 | 0.000 kg |
| 211200020258<br>IPTA 2 | 0.000 kg |

**G:** Weight per storage unit



PohlCon GmbH
Nobelstraße 51 | 12057 Berlin
Phone: +49 30 68283-04 | Fax: +49 30 68283-383 | contact@pohlcon.com

Issue date: 26.11.2026. Errors and technical changes reserved