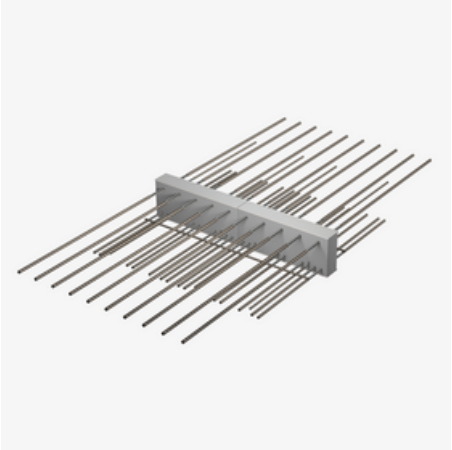

IPT

Thermally insulated cantilever slab connection with 80 mm insulating body and steel compression rods

IPT is a thermally insulated cantilever slab connection with an 80 mm insulating body and integrated suspension reinforcement on the balcony side for cantilevered reinforced concrete components. It is suitable for transmitting negative moments and positive shear forces. The stainless steel rebar is resistant to corrosion. A two-part version of the product is available for installation in precast plants. The pressure plane consists of steel compression rods. It complies with fire protection requirements: IPT is available for fire protection structures up to REI 120. Please specify the load-bearing capacity, shear force bearing capacity, concrete cover, element height and fire protection version when ordering.

ETA European Technical Assessment: ETA-17/0466

abG General Building Approval: Z-15.7-354 (combined with ETA-17/0466)

Article	G
210200014990 IPT110 Q10	44.000 kg
210200014991 IPT110 Q12	45.500 kg
210200014992 IPT110 Q14	49.100 kg
210200015002 IPT150 Q10	57.400 kg
210200015008 IPT150 Q12	59.700 kg
210200015012 IPT150 Q14	62.900 kg

G: Weight per storage unit

PohlCon

PohlCon GmbH
Nobelstraße 51 | 12057 Berlin
Phone: +49 30 68283-04 | Fax: +49 30 68283-383 | contact@pohlcon.com

Issue date: 26.11.2026. Errors and technical changes reserved