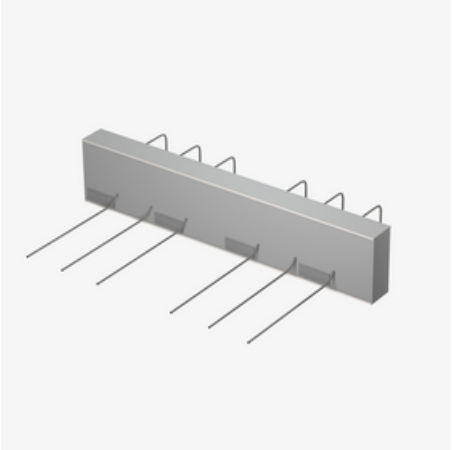

IPQ

Thermally insulated slab connection for transmitting shear forces in supported reinforced concrete components

IPQ is a thermally insulated slab connection with an 80 mm insulating body for transmitting shear forces in supported reinforced concrete components. The stainless steel rebar is resistant to corrosion. The thrust bearing is made of special concrete. It complies with fire protection requirements: IPQ is available for fire protection structures up to REI 120. Please specify the load-bearing capacity, element height and fire protection version when ordering.

Type testing ISOPRO® 120 thermal insulation element

Test report no. 4117-5076 confirms the suitability of ISOPRO® thermal insulation elements in accordance with the applicable building regulations.

ETA European Technical Assessment: ETA-17/0466

abG General Building Approval: Z-15.7-354 (combined with ETA-17/0466)

TYP Type approval: 4117-5076

Article	Q-bar on ceiling side	G
210400012403 IPQ10	Curved	5.430 kg
210400012411 IPQ110	Straight	12.500 kg
210400012414 IPQ20	Curved	5.610 kg
210400012421 IPQ30	Curved	5.790 kg
210400012427 IPQ40	Curved	6.150 kg
210400012433 IPQ50	Curved	6.500 kg
210400012442 IPQ70	Curved	7.100 kg
210400012445 IPQ80	Straight	7.500 kg
210400012448 IPQ90	Straight	9.300 kg

PohlCon

PohlCon GmbH
Nobelstraße 51 | 12057 Berlin
Phone: +49 30 68283-04 | Fax: +49 30 68283-383 | contact@pohlcon.com

Issue date: 26.11.2026. Errors and technical changes reserved

Article	Q-bar on ceiling side	G
210400015016 IPQ85	Straight	8.500 kg
210400015018 IPQ120	Straight	13.800 kg
210400017123 IPQ100	Straight	11.200 kg

G: Weight per storage unit

PohlCon GmbH
Nobelstraße 51 | 12057 Berlin
Phone: +49 30 68283-04 | Fax: +49 30 68283-383 | contact@pohlcon.com

Issue date: 26.11.2026. Errors and technical changes reserved