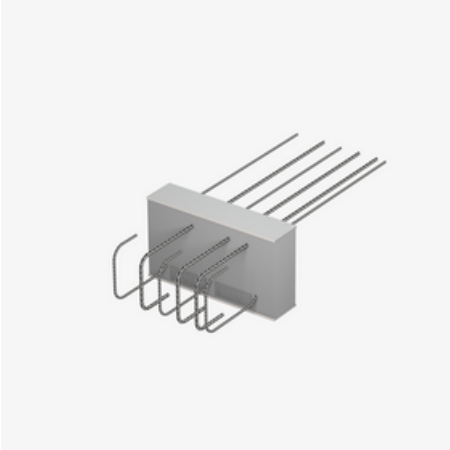

IPO

Thermally insulated connection for reinforced concrete brackets supporting masonry or precast elements

IPO is a thermally insulated connection with an 80 mm insulating body for connecting ceiling slabs with reinforced concrete brackets used as supports for masonry or precast elements. It is suitable for transmitting positive shear forces, the resulting negative moments and horizontal forces. These elements are used at specific points depending on the relevant structural requirements. The stainless steel rebar is resistant to corrosion. It complies with fire protection requirements: IPO is available for fire protection structures up to REI 120. Please specify the load-bearing capacity, element height and fire protection version when ordering.

ETA European Technical Assessment: ETA-17/0466

Article	G
211400021507 IPO 18 R	4.970 kg

G: Weight per storage unit

PohlCon

PohlCon GmbH
Nobelstraße 51 | 12057 Berlin
Phone: +49 30 68283-04 | Fax: +49 30 68283-383 | contact@pohlcon.com

Issue date: 26.11.2026. Errors and technical changes reserved