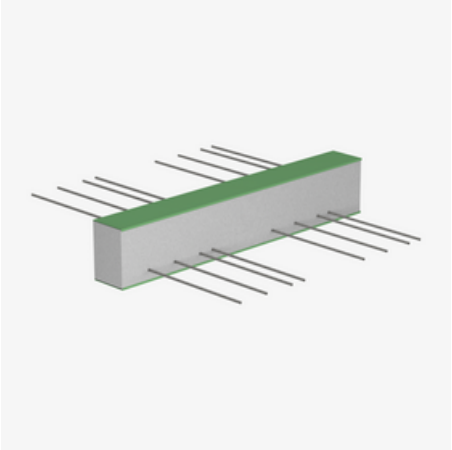

IP120 QZ

Thermally insulated slab connection for tension-free transmission of shear forces without a pressure component and with 120 mm insulating body

IP120 QZ is a thermally insulated slab connection with a 120 mm insulating body for transmitting shear forces in supported reinforced concrete components. The stainless steel rebar is resistant to corrosion. For the purpose of tension-free support, this item does not have a pressure component. It complies with fire protection requirements: IP120 QZ is available for fire protection structures up to REI 120. Please specify the load-bearing capacity, element height and fire protection version when ordering.

Type testing ISOPRO® 120 thermal insulation element

Test report no. 4117/6 confirms the suitability of ISOPRO® thermal insulation elements in accordance with the applicable building regulations.

Fire resistance up to REI 120 available, including half-metre and quarter-metre sections with all-round fire protection.

ETA European Technical Assessment: ETA-17/0466

abG General Building Approval: Z-15.7-354 (combined with ETA-17/0466)

TYP Type approval: 4117/6

Q-bar on ceiling side: Curved

Article	Element lenght	Height
233600021054 IP120 QZ10	1000; 500 mm	160 - 250 mm
233600021055 IP120 QZ20	1000; 500 mm	160 - 250 mm
233600021056 IP120 QZ30	1000; 500 mm	160 - 250 mm
233600021057 IP120 QZ40	1000; 500; 250 mm	160 - 250 mm
233600021058 IP120 QZ50	1000; 500 mm	160 - 250 mm

Q-bar on ceiling side: Straight

Article	Element lenght	Height
233600021059 IP120 QZ60	1000; 500 mm	160 - 250 mm

PohlCon

PohlCon GmbH
Nobelstraße 51 | 12057 Berlin
Phone: +49 30 68283-04 | Fax: +49 30 68283-383 | contact@pohlcon.com

Issue date: 27.11.2026. Errors and technical changes reserved

Article	Element lenght	Height
233600021060 IP120 QZ70	1000; 500; 250 mm	160 - 250 mm
233600021061 IP120 QZ80	1000; 500 mm	160 - 250 mm
233600021062 IP120 QZ90	1000; 500; 250 mm	170 - 250 mm
233600021063 IP120 QZ100	1000; 500 mm	170 - 250 mm
233600021064 IP120 QZ110	1000; 500; 250 mm	180 - 250 mm
233600021065 IP120 QZ120	1000; 500 mm	180 - 250 mm

Height: height (range)

PohlCon

PohlCon GmbH
Nobelstraße 51 | 12057 Berlin
Phone: +49 30 68283-04 | Fax: +49 30 68283-383 | contact@pohlcon.com

Issue date: 27.11.2026. Errors and technical changes reserved