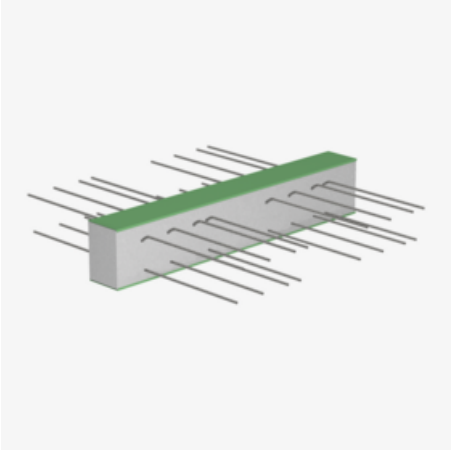

IP120 QQZ

Thermally insulated slab connection for unrestricted transmission of positive and negative shear forces without compression components and with 120 mm insulating body

IP120 QQZ is a thermally insulated slab connection with a 120 mm insulation core for the transfer of positive and negative shear forces in supported reinforced concrete structures. Corrosion protection is ensured by stainless ribbed steel. To allow for unrestricted movement, the product has no compression components. Fire safety requirements are met: IP120 QQZ is available for fire-resistant constructions up to REI 120. When ordering, please specify the load-bearing class, element height and fire-resistant version.

Type testing ISOPRO® 120 thermal insulation element

Test report No. 4117/6 confirms the suitability of ISOPRO® thermal insulation elements in accordance with the applicable building regulations

Fire protection up to REI 120 available, including half-metre and quarter-metre elements with all-round fire protection.

ETA European Technical Assessment: ETA-17/0466

abG General Building Approval: Z-15.7-354 (combined with ETA-17/0466)

Q-bar on ceiling side: Curved

Article	Element lenght	Height
233800021078 IP120 QQZ10	1000; 500 mm	160 - 250 mm
233800021079 IP120 QQZ20	1000; 500 mm	160 - 250 mm
233800021080 IP120 QQZ30	1000; 500 mm	160 - 250 mm
233800021081 IP120 QQZ40	1000; 500; 250 mm	160 - 250 mm
233800021082 IP120 QQZ50	1000; 500 mm	160 - 250 mm

Q-bar on ceiling side: Straight

Article	Element lenght	Height
233800021083 IP120 QQZ60	1000; 500 mm	160 - 250 mm

PohlCon

PohlCon GmbH
Nobelstraße 51 | 12057 Berlin
Phone: +49 30 68283-04 | Fax: +49 30 68283-383 | contact@pohlcon.com

Issue date: 27.11.2026. Errors and technical changes reserved

Article	Element lenght	Height
233800021084 IP120 QQZ70	1000; 500; 250 mm	160 - 250 mm
233800021085 IP120 QQZ80	1000; 500 mm	160 - 250 mm
233800021086 IP120 QQZ90	1000; 500; 250 mm	170 - 250 mm
233800021087 IP120 QQZ100	1000; 500 mm	170 - 250 mm
233800021088 IP120 QQZ110	1000; 500; 250 mm	180 - 250 mm
233800021089 IP120 QQZ120	1000; 500 mm	180 - 250 mm

Height: height (range)

PohlCon GmbH
Nobelstraße 51 | 12057 Berlin
Phone: +49 30 68283-04 | Fax: +49 30 68283-383 | contact@pohlcon.com

Issue date: 27.11.2026. Errors and technical changes reserved