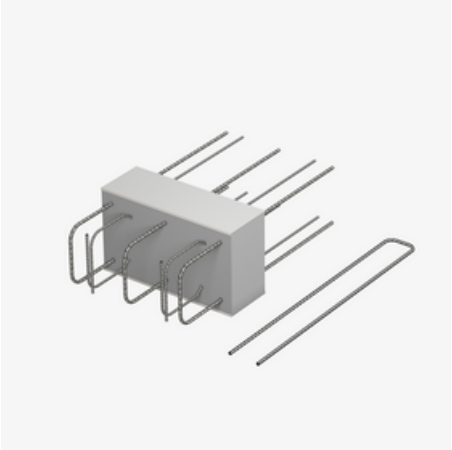

IP120 F

Thermally insulated connection for front parapets with 120 mm insulating body

IP120 F is a thermally insulated connection with a 120 mm insulating body for connecting front parapets with ceiling slabs. It is suitable for transmitting normal forces, moments and horizontal forces. These elements are used at specific points depending on the relevant structural requirements. The stainless steel rebar is resistant to corrosion. It complies with fire protection requirements: IP120 F is available for fire protection structures up to REI 120. Please specify the element height and fire protection version when ordering.

AbZ General building approval: Z-15.7-331

Article	G
234700024697 IP120 F 200	5.700 kg

G: Weight per storage unit

PohlCon

PohlCon GmbH
Nobelstraße 51 | 12057 Berlin
Phone: +49 30 68283-04 | Fax: +49 30 68283-383 | contact@pohlcon.com

Issue date: 27.11.2026. Errors and technical changes reserved