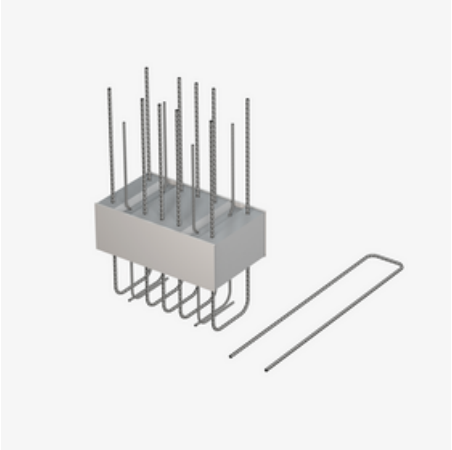

IP120 A

Thermally insulated connection for attached parapets and balustrades with 120 mm insulating body

IP120 A is a thermally insulated connection with a 120 mm insulating body for connecting attached parapets and balustrades with ceiling slabs. It is suitable for transmitting normal forces, moments and horizontal forces. These elements are used at specific points depending on the relevant structural requirements. The stainless steel rebar is resistant to corrosion. It complies with fire protection requirements: IP120 A is available for fire protection structures up to REI 120. Please specify the load-bearing capacity, parapet width and fire protection version when ordering.

AbZ General building approval: Z-15.7-331

Article	G
234600024716 IP120 A1 200	3.000 kg
234600024726 IP120 A2 200	3.000 kg

G: Weight per storage unit

PohlCon

PohlCon GmbH
Nobelstraße 51 | 12057 Berlin
Phone: +49 30 68283-04 | Fax: +49 30 68283-383 | contact@pohlcon.com

Issue date: 27.11.2026. Errors and technical changes reserved